TR-GAD2GA4041B

Speaker Tray Top - Holds Two GAD "GA-4041GS"

grundorf corp™
www.grundorf.com · (712)-322-3900

#	QTY	PART NUMBER	DESCRIPTION
1	2	31-005	HANDLE - RECESSED/LOGO/ZINC
2	1	83-008	BADGE - GRUNDORF ORIGINAL

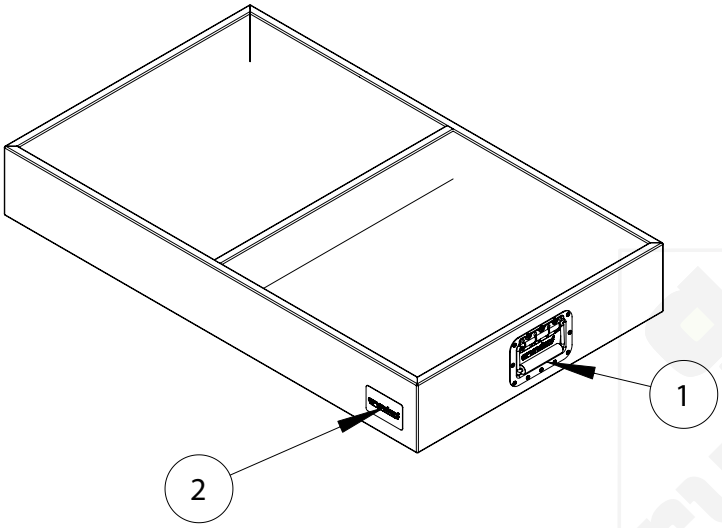

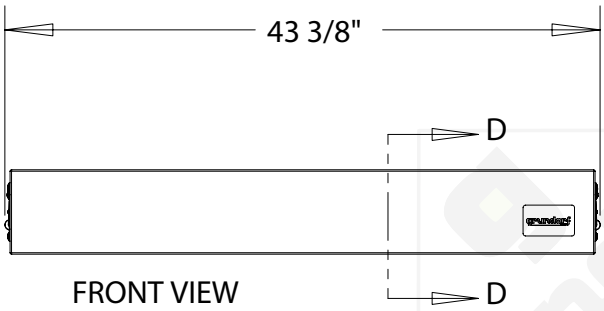

FRONT VIEW

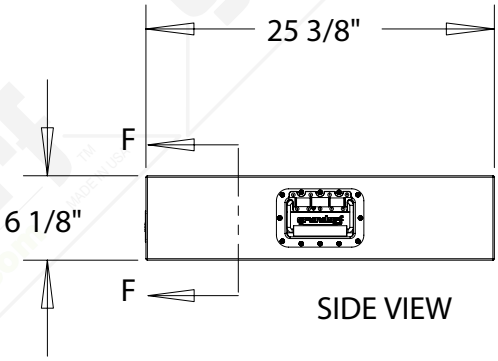

SIDE VIEW

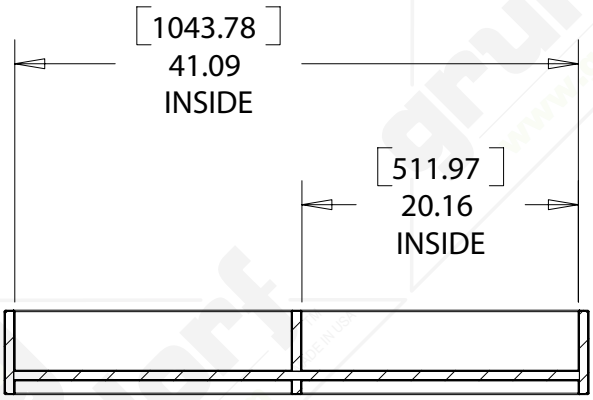

SECTION F-F

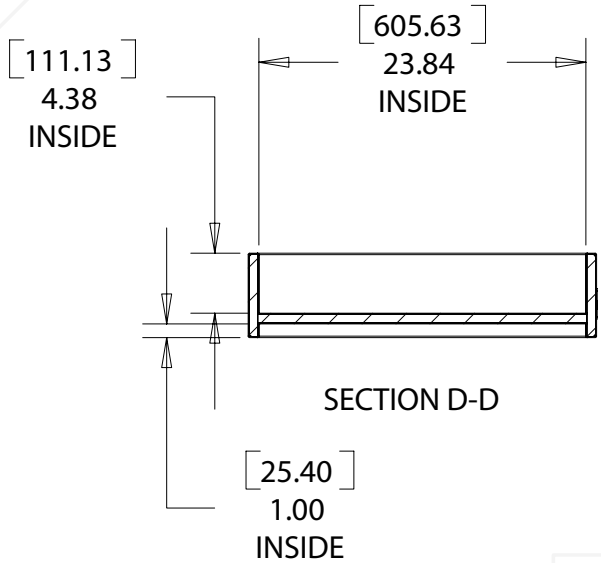

SECTION D-D

© 2008 GRUNDORF CORPORATION.
PROPRIETARY AND CONFIDENTIAL THE INFORMATION CONTAINED IN THIS DRAWING IS THE SOLE PROPERTY OF GRUNDORF CORPORATION.

8/8/2008